INSTALLATION INSTRUCTIONS

Item#1493 (New. 05/10/2012)

READ AND SAVE THESE INSTRUCTIONS

WARNING! SHUT POWER OFF AT FUSE OR CIRCUIT BREAKER.

AVERTISSEMENT! COUPER LE COURANT AU NIVEAU DES FUSIBLES OU DU DISJONCTEUR.

HANGING THE FIXTURE (Fig. 1)

1. Carefully remove the fixture from the carton and check that all parts are included as shown in the illustration.
2. Shut off power at the circuit breaker and remove old fixture including the mounting hardware.
3. Place the Glass Panel (I) to the side of the Metal Frame (O), then align backing plate (K) with Hole (M), secure by using Screws (J).
4. Determine length desired and thread Bars (G) to Canopy (E) and Metal Frame (O).
5. Attach the Circular Strap (B) to the Junction box (A) using Screws (C). The side of the Circular Strap with “GND” marked on it and two convex points must face out.
6. Thread Studs (D) about 1/4” into the pre-drilled holes in the Circular Strap (B) spaced the same distance apart as the holes in the canopy (E).

CONNECTING THE WIRES (Fig. 2)

7. At this point, connect the electrical wire as shown in (Fig.2), making sure that all wire connectors are secured. If your outlet has a ground wire (green or bare copper), connect the fixture’s Ground Wire to it. Otherwise, connect the fixture Ground Wire directly to the Circular Strap using the Green Screw provided.

FINISHING THE INSTALLATION (Fig. 1)

8. Tuck the wire connections neatly into the ceiling Junction Box (A) and then raise the Canopy (E) all the way to the ceiling. Thread Studs (D) into canopy, and secure with Knurled Knobs (F).
9. Thread the Nipple (P) into the bottom of Socket (Q).
10. Install light bulb (not included) in accordance with the fixture’s specifications. **(DO NOT EXCEED THE MAXIMUM WATTAGE RATING!) (NE PAS DEPASSER LA PUISSANCE NOMINALE MAXIMALE!)**
11. Place Glass Panel (L) and Washer (H) over Nipple (P) then secure with Finial (N).

Your installation is now complete. Return power to the junction box and test the fixture.

Note: Illustration (Fig. 1) on this manual is for installation purposes only. It may or may not be identical to the fixture purchased.

Fig. 1

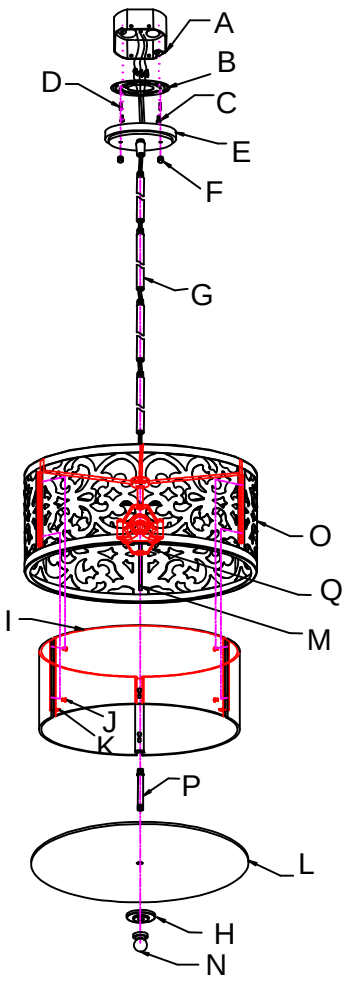

Fig. 2

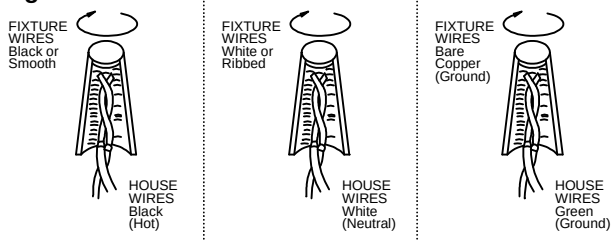

Intertek

american lighting association

LA-1442E