INSTALLATION INSTRUCTIONS

Item# 3586-795

READ AND SAVE THESE INSTRUCTIONS

WARNING! SHUT POWER OFF AT FUSE OR CIRCUIT BREAKER.
VERTISEMENT! COUPER LE COURANT AU NIVEAU DES FUSIBLES OU DU DISJONCTEUR.

ASSEMBLING THE FIXTURE (Fig. 1)

1. Shut off power at the fuse box or circuit breaker box and remove the old fixture including the mounting hardware.
2. Carefully unpack your new fixture and lay out all the parts in a clean area. Ensure not to misplace any small parts necessary for installation.
3. Your fixture is supplied with 2 sizes of stem, 1x 6" (L) and 3x 12" (K).
4. Determine the desired hanging height and thread rods 3x (K), 1x (L) with the fixture loop (J).
5. Slip stem assembly along the wire and thread onto threaded tube (1) and tighten.

HANGING THE FIXTURE (Fig. 2)

6. Thread all thread (D) into collar loop (F) until snug.
7. Thread the other end of all thread (D) into crossbar. Note: The length of all thread (D) into crossbar may be adjusted if necessary.
8. Use lock washer (B) and hex nut (E) to secure all thread (D) to crossbar (A).
9. Take crossbar assembly and mount to junction box (JB) ***"not provided"*** with 8-32 mounting screws. The side of mounting bar (A) marked with "GND" must be faced out. Note: 1x quick link are provided.
10. Hook quick link (G) to fixture loop (J) then slip canopy (H) and collar ring (I) over quick link (G) and allow them to rest on top of fixture loop (J).
11. Raise the fixture assembly up and attach quick link (G) to collar loop (F) and secure.
12 Feed fixture wires through collar loop (F) and crossbar assembly.

CONNECTING THE WIRE (Fig. 3)

13. Connect the electrical wire as shown in Fig. 3, making sure that all wire connectors are secured. If your junction box has a ground wire (green, or bare copper), connect fixture's ground wire to it. Otherwise connect fixture's ground wire directly to crossbar (A) using green screw provided.
14. Tuck wire connections neatly into junction box (JB).
15. Raise canopy over ceiling loop (F) and secure with collar ring (I).

FINISHING THE FIXTURE (Fig. 1)

16. To begin installing the accessories, unwrap all the accessories from their packing and place in a clean area.
17. Take the crystal panel (cp) accessories and hook into inner frame (2). Do the same procedure for the rest of the crystal panels (cp).
18. Next, take the alabaster stone (as) and hook into the outer frame (3). Do the same procedure of installing all the alabaster stones (as)
19. Slip the crystal bobeches (cb) into socket cover (sc).
20. Install 9x E12 base light bulbs (LB) up to 60 watts each or CFL or LED equivalent **(not included)** in accordance with the fixture specification.
    DO NOT EXCEED THE MAXIMUM WATTAGE RATING!
    (NE PAS DEPASSER LA PUISSANCE NOMINALE MAXIMALE!)

Your installation is now complete. You can now turn the power ON and test the fixture.

Note: Illustration (Fig. 1) on this manual is for installation purposes only. It may or may not be identical to the fixture purchased.

FIG. 1

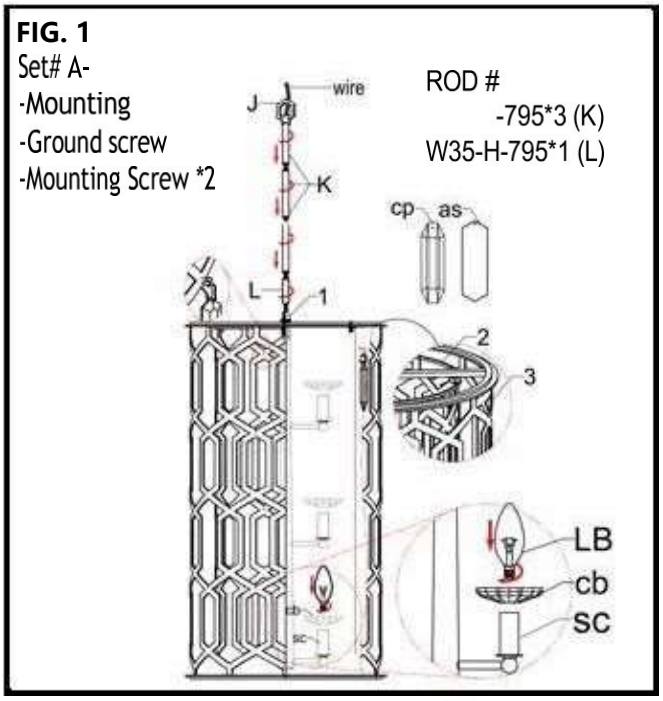

FIG. 2

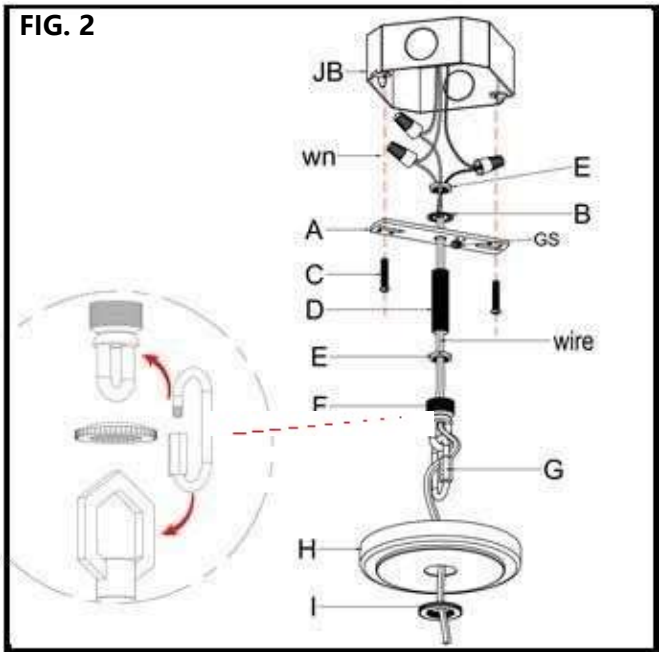

Fig. 3

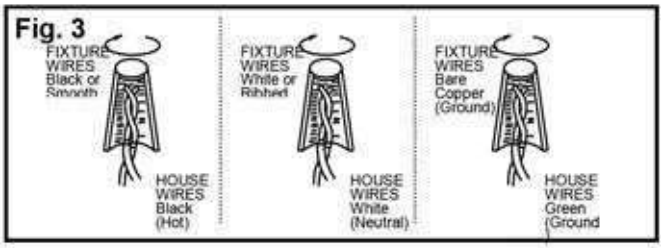

Intertek

american lighting association