INSTALLATION INSTRUCTIONS

item#72021-A179-PL(Rev. 09/27/2011)

READ AND SAVE THESE INSTRUCTIONS

WARNING! SHUT POWER OFF AT FUSE OR CIRCUIT BREAKER.

AVERTISSEMENT! COUPER LE COURANT AU NIVEAU DES FUSIBLES OU DU DISJONCTEUR.

MOUNTING THE BACKPLATE (Fig.1)

1. Shut off the power at the circuit breaker and remove the old fixture, including the mounting hardware.
2. Carefully unpack your new fixture and lay out all the parts on a clear area. Take care not to lose any small parts necessary for installation.
3. Attach the back plate (A) to the Junction box with Screws (B) (Size: #8-32N*L0.5”). The side of the back plate marked “GND” must face out.

CONNECTING THE WIRES (Fig. 2)

4. Connect the electrical wires as shown in Fig. 2, making sure that all wire connectors are secured. If your outlet box has a ground wire (green or bare copper), connect the fixture’s ground wire to it. Otherwise, connect the fixture’s ground wire directly to the back plate using the green screw provided. After the wires are connected carefully tuck them inside the junction box.

COMPLETING THE INSTALLATION

5. Install the glass panel (G) into fixture body (D) and secure with the cap nut and clips provided.
6. Place the fixture body (D) over the back plate (A), and secure with screws (C).
7. To prevent moisture from entering the outlet box and causing a short, use clear caulking (i.e. Indoor/Outdoor Silicone Sealant) to outline the outside of fixture back-plate where it meets the wall leaving a space at bottom to allow moisture a means to escape (Fig.3).
8. Install the CFL 1*26W bulb (F) (included) into socket (E) in accordance with the fixture’s specification. **(DO NOT EXCEED THE SPECIFIED WATTAGE!) (NE PAS DEPASSER LA PUISSANCE NOMINALE MAXIMALE!).**
9. The ballast and lamp are combined, to replace or install, twist pins into socket as shown on Fig 4.
10. This fixture is rated for a minimum start temperature of 0 degrees Fahrenheit (-17 degree Celsius).
11. This fixture is ETL Listed for Wet Location applications.

Your installation is now complete. Return power and test the fixture.

Note: Illustration (Fig. 1) on this manual is for installation purposes only. It may or may not be identical to the fixture purchased.

The color correlated Temperature (CCT) for replacing the enclosed lamp is (2700K).

Caution: CFLs contain Mercury (Hg) Dispose of according to Local, State and Federal Law. (www.epa.gov/bulbrecycling).

Fig. 1

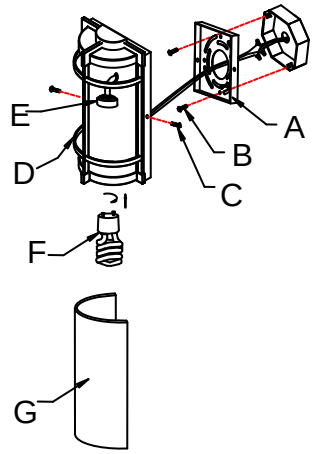

Fig. 2

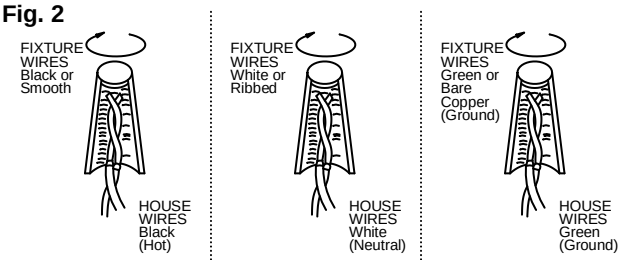

Fig. 3

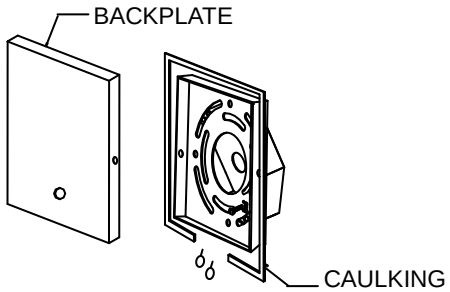

Fig. 4

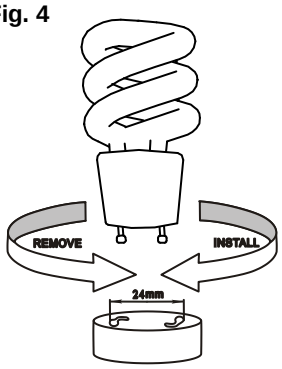

Warning: When re-lamping, please use UL and CUL Listed Self-Ballast Fluorescent Lamp, certificated by UL1993.

LA-1165E-A

Intertek

american lighting association