INSTALLATION INSTRUCTIONS

Model# 73292-143C

READ AND SAVE THESE INSTRUCTIONS

WARNING! SHUT POWER OFF AT FUSE OR CIRCUIT BREAKER.

AVERTISSEMENT! COUPER LE COURANT AU NIVEAU DES FUSIBLES OU DU DISJONCTEUR.

PREPARING FOR INSTALLATION (Fig. 1)

1. Shut off power at the fuse box or circuit breaker box and remove the old fixture including the mounting hardware.
2. Carefully unpack your new fixture and lay out all the parts in a clear area. Take care not to misplace any small parts necessary for installation.
3. Attach mounting plate (B) using outlet box screws (F) to outlet box (A) (not included). The side of mounting plate marked "GND" must face out. (Fig 1)

CONNECTING THE WIRES (Fig. 2)

4. Connect electrical wires as shown in Fig.2 with connectors (E), making sure that all wire connectors are secured. If your outlet box (A) has a ground wire (green or bare copper), connect fixture's ground wire to it. Otherwise, connect fixture's ground wire directly to mounting plate (B) using green screw (D) provided.
5. Tuck wire connectors neatly into the outlet box (A).

COMPLETTING THE INSTALLATION (Fig. 1)

6. Place back plate (G) over mounting screws (C), followed by rubber gasket (K), then secure to wall using cap nuts (H).
7. Install (4) four candelabra base bulb (I) up to 40 Watts, or CFL or LED equivalent (not included), in accordance with the fixture specification. **(DO NOT EXCEED THE MAXIMUM WATTAGE RATING) (NE PAS DEPASSER LA PUISSANCE NOMINALE MAXIMALE!)**
8. To prevent moisture from entering outlet box (A) and causing a short, use clear silicone sealant to outline outside of fixture back plate (G) where it meets the wall leaving a space at bottom to allow moisture a means to escape. (Fig.3)
9. This fixture is ETL listed for wet location applications.

Your installation is now complete. Return power to the outlet box and test the fixture.

Fig. 1

Mounting plate (1) (Part# A-020-102)
Candle Covers (4) (Part# CCV21069P-143C)
Ground Screw (1)
Mounting Screws (2)

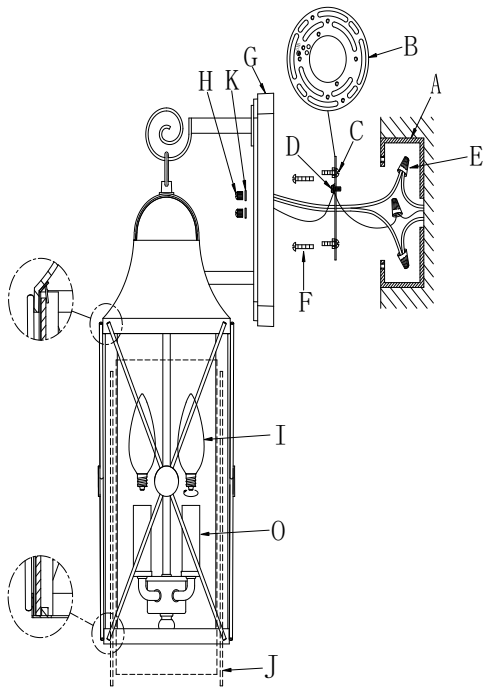

Glass code# G73292-1
G73292-2

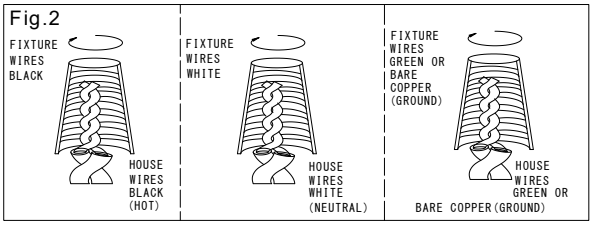

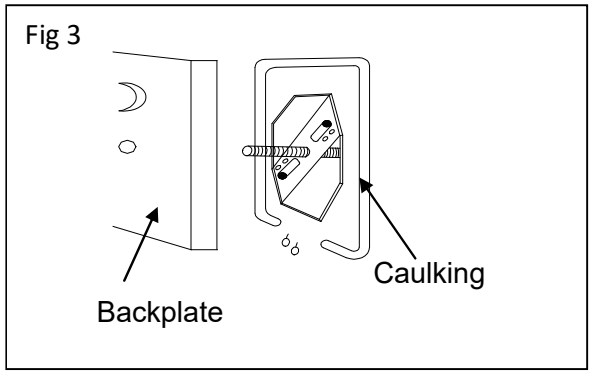

"CAUTION-RISK OF FIRE CONSULT A QUALIFIED ELECTRICIAN TO ENSURE CORRECT BRANCH CIRCUIT CONDUCTOR"

ATTENTION – RISQUE D'INCENDIE, CONSULTER UN ÉLECTRICIEN QUALIFIÉ POUR VOUS ASSURER QUE LES CONDUCTEURS DE LA DÉRIVATION SONT ADÉQUATS.