INSTALLATION INSTRUCTIONS

Model # 8261-L

READ AND SAVE THESE INSTRUCTIONS

WARNING! SHUT POWER OFF AT FUSE OR CIRCUIT BREAKER.

AVERTISSEMENT! COUPER LE COURANT AU NIVEAU DES FUSIBLES OU DU DISJONCTEUR.

PREPARING FOR INSTALLATION (Fig. 1)

1. Shut off power at the circuit breaker and remove the old fixture including the mounting hardware.
2. Carefully unpack your new fixture and lay out all the parts in a clear area. Take care not to misplace any small parts necessary for installation.
3. Thread the two studs (B) into the pre-drilled holes in the cross bar (C) spaced the same distance apart as the holes in the back plate.
4. Attach the cross bar (C) using outlet box screws (F) to the outlet box (A) (not supplied),the side of the marked "GND" must face out (Fig 1).

CONNECTING THE WIRES (Fig. 2)

5. Connect the electrical wires as shown in Fig.2. Making sure that all wire connectors are secured. If your outlet box has a ground wire (green or bare copper), connect the fixture's ground wire to it. Otherwise, connect the fixture's ground wire directly to the cross bar using the green screw (D) provided.

FINISHING THE INSTALLATION (Fig. 1)

6. Align the back plate onto studs (B) and secure with cap nut (G) (Fig 1).
7. To prevent moisture from entering the outlet box (A) (not supplied) and causing a short, use clear silicone sealant to outline the outside of fixture back plate where it meets the wall leaving a space at bottom to allow moisture a means to escape (Fig. 3)
8. **Bulb (H) information (1 x AC LED 10W included.) (DO NOT EXCEED THE MAXIMUM WATTAGE RATING) (NE PAS DEPASSER LA PUISSANCE NOMINALE MAXIMALE!)**

Replacing LED module (Fig.4)

The LED module can be replaced by a qualified electrician without cutting of wire and without damage to any decorative element to which the fixture is attached. See installation steps for more details (Fig.4).

a. Shut off power, take out and unplug the male and female jacket（M&N）via the bottom of the cage (J).
b. Loosening module screws (I) and carefully remove LED module (H) for re-lamping. Note: The LED module should be provided by a specified supplier.
c. For better heat dissipation the LED module (H) should be installed with the heat transfer material (O) when re-lamping.

Your installation is now complete. Return power to the outlet box and test the fixture.

Note: Illustration (Fig.1) on this manual is for installation purposes only. It may or may not be identical to the fixture purchased.

Fig.1

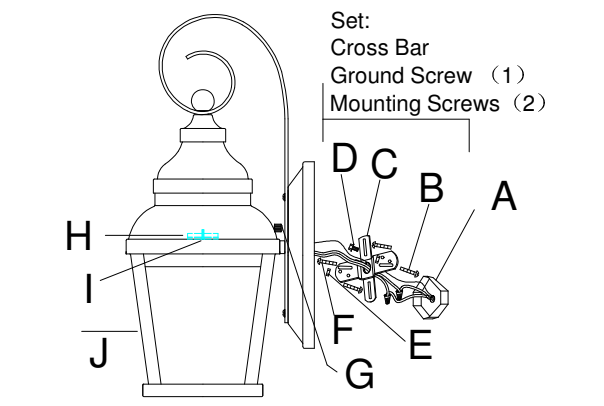

Fig.2

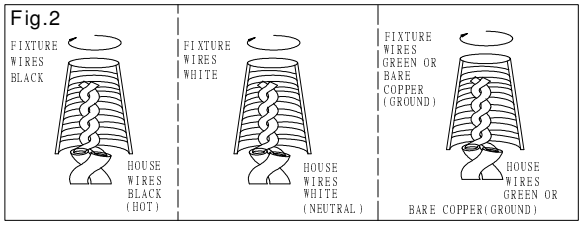

Fig. 3

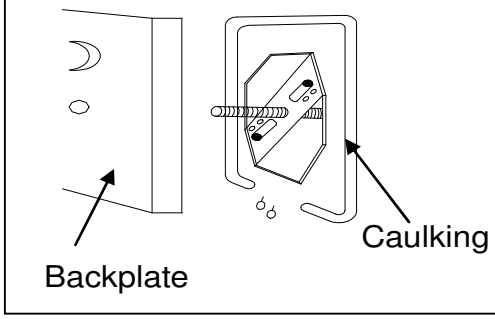

Fig. 4

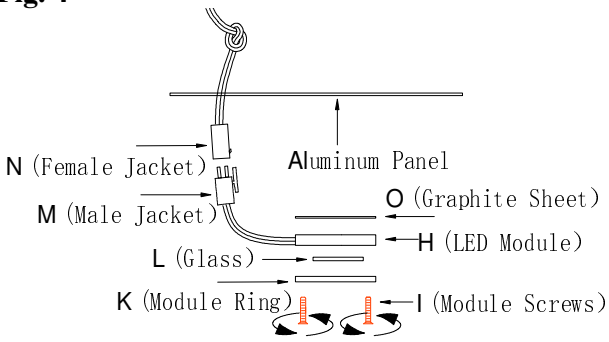

Intertek

american lighting association