minkaAire™

Supra™
with Light Kit
Model No.F569

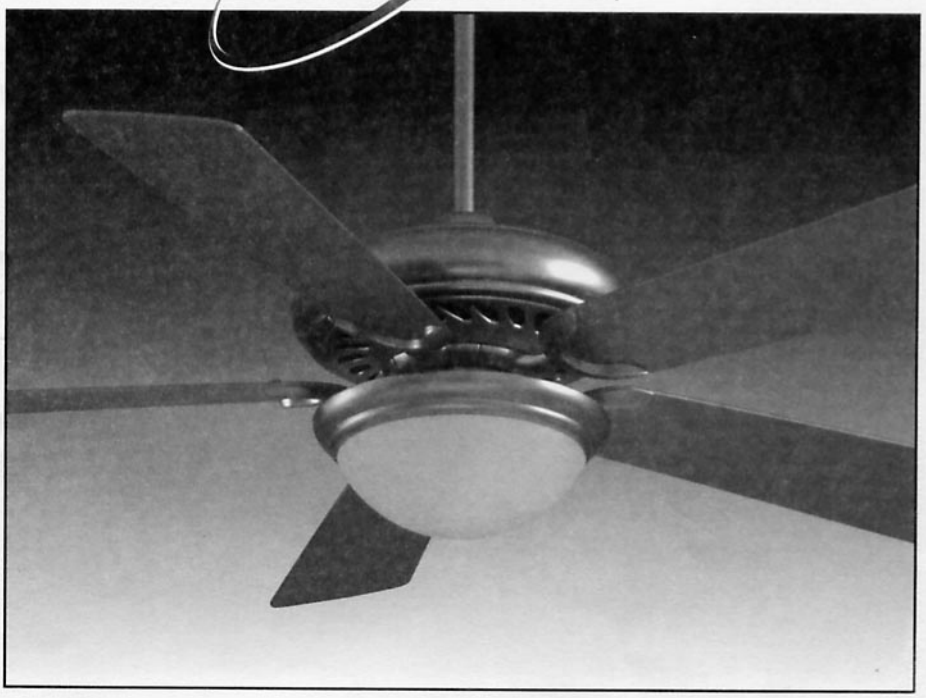

Instruction Manual

Please Read and Save Instructions

Lifetime WARRANTY

Congratulations on your purchase of a **Minka-Aire**™ ceiling fan! Your new fan will be a beautiful addition to you home, and will keep you comfortable throughout the year.

Minka-Aire™ offers a variety of ceiling fans: combinations of wood and brass finish, solid designer colors, and unique glass and crystal designs. A large selection of light fixtures and light kits are also available. Ask your dealer about accessories that will allow your to customize your fan.

We're certain that your **Minka-Aire**™ fan will provide you will many years of comfort, energy savings and satisfaction. To ensure your personal safety and to maximize the performance of your fan, please read this manual thoroughly.

LIMITED LIFETIME WARRANTY

Minka-Aire™ warrants this fan to be free from defects in material and workmanship for one year from the date of purchase, expect for the motor, **Minka-Aire**™ warrants to the original owner that the motor in this fan shall be free from defects in material and workmanship as long as the original purchase owns the fan. **Minka-Aire**™ only obligation under this limited warranty is to replace repair or refund the purchase price any fan confirmed by **Minka-Aire**™ to be defective in material or workmanship after such fan is returned to **Minka-Aire**™ by the original purchase along with a proof of purchase and with shipping charges prepaid. This warranty shall not apply to fans which have been damaged as a result of improper installation, removed from the original installation or subjected to use for which the fan was not designed. The customer shall be responsible for any cost of removing the old fan, installing a new fan or any other costs. This limited lifetime warranty is in lieu of all other expressed warranties. **Minka-Aire**™ shall under no circumstances be liable for any incidental or consequential damages.

Date Purchase _____

Store Purchase _____

Model Number F569

Serial Number _____

Contents

Safety Rules..... 1
Package Contents..... 2
Installing Your Fan..... 3
Hanging the Fan..... 4
Installing the Receiver..... 5
Finishing the Installation..... 6
Attaching the Fan Blades..... 7
Light Kit Installation..... 8
Installing the Light Bulb & Glass Shade..... 9
Operating Your Transmitter..... 10
Care of Your Fan..... 11
Troubleshooting..... 12
Specifications..... 13

minkaAire™

1151 W. Bradford court, Corona, CA 92882

© and Patents 2002, All Rights Reserved

american lighting association

UL® Listed

1. Safety Rules

1. Before you begin installing the fan, **shut the power off** at the circuit breaker or the fuse box.

2.Be cautions! Read all instructions and safety information before installing your new fan. Review accompanying assembly diagrams.

3. Make sure that all electrical connections comply with local codes, ordinances, or National Electrical Codes. Hire a qualified electrician or consult a do-it-yourself wiring handbook if you are unfamiliar with installing electrical wiring.

4. Make sure the installation site you choose allows the fan blades to rotate without any obstructions. Allow a **minimum clearance of 7 feet** from the floor to the lowest edge of the blades and **18 inches** from the tip of the blade to the wall.

5.If you are mounting the fan to a ceiling outlet box, use U.L. Listed metal octagonal outlet box marked "Acceptable for fan support". Secure the box directly to the building structure. The outlet box and its support must be able to support the moving weight of the fan (at least 50 lbs.) **Do not use a plastic outlet box.**

6. Caution: To reduce the risk of personal injury use only the screws provided with the outlet box.

7. If you are mounting the fan to a joist, make sure it is able to support the moving weight of the fan (at least 50 lbs.).

8. After you install the fan, make sure that all mountings are secured to prevent the fan from falling.

9. Do not insert anything into the fan blades while the fan is operating.

10. Turn the fan off and wait for it to stop completely before reversing the fan direction.

NOTE: The important safeguards and instructions appearing in this manual are not meant to cover all possible conditions and situations that may occur. It must be understood that common sense, caution and care are factors which can not be built into this product. These factors must be supplied by the person(s) installing, caring for and operating the unit.

WARNING

TO REDUCE THE RISK OF FIRE, ELECTRIC SHOCK, OR OTHER PERSONAL INJURY, MOUNT FAN ONLY TO A U.L. LISTED OUTLET BOX OR SUPPORTING SYSTEM MARKED ACCEPTABLE FOR FAN SUPPORT AND USE MOUNTING SCREWS PRO-VIDED WITH THE OUTLET BOX IN CONJUNCTION WITH THE LOCKWASHERS PROVIDED WITH THE FAN, MOST OUTLET BOXES COMMONLY USED FOR THE SUPPORT OF LIGHTING FIXTURES ARE NOT ACCEPTABLE FOR FAN SUPPORT AND NEED TO BE REPLACED. CONSULT A QUALIFIED ELECTRICIAN IF IN DOUBT.

TO REDUCE THE RISK OF PERSONAL INJURY, DO NOT BEND THE BLADE HOLDERS WHILE INSTALLING, BALANCING THE BLADES, OR CLEANING THE FAN. DO NOT INSERT FOREIGN OBJECTS BETWEEN ROTATING FAN BLADES.

TO REDUCE THE RISK OF FIRE OR ELECTRIC SHOCK, DO NOT USE THIS FAN WITH ANY SOLID-STATE SPEED CONTROL DEVICE

PACKAGE CONTENTS 2.

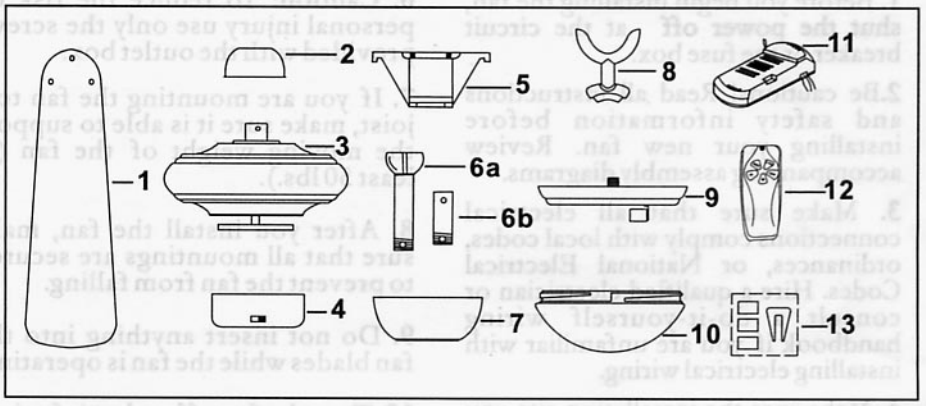

Unpack your fan and check the contents. You should have the following items:

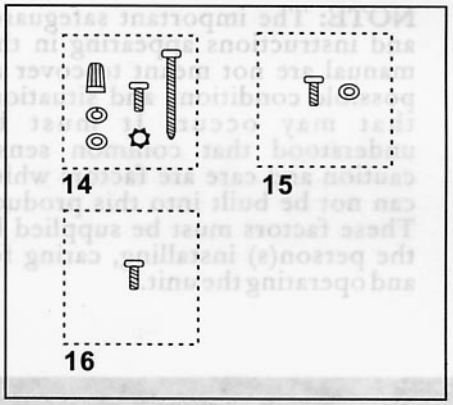

1. Fan Blades (5)
2. Coupling Cover
3. Fan Motor/Housing ass'y
4. Switch Cup
5. Hanger Bracket

6a. Standard downrod ass'y
6b. Minimum-length downrod (for close to the ceiling installation only)

7. Canopy
8. Blade Bracket (5)
9. Light Kit
10. Glass Shade
11. Receiver with 6 Wire Nuts
12. Remote Control with 2 Screws
13. Balancing Kit

14. **Mounting Hardware:**
    #10 X 2-1.5" Screws (2 PCs.)
    #8-32 X 3/4" Machine screws (2PCs.)
    Lock washers (2 PCs.)
    4mm Star washers (2 PCs.)
    Wire nuts (3 PCs.)
    Washers (2PCs.)
15. **Blade Attachment Hardware:**
    3/16" x 7 mm Screws (16PCs.)
    Fiber Washers (16PCs.)
16. **Bracket Holder Hardware:**
    1/4" x 14mm Screws (10PCs.)

3. Installing Your Fan

Tools Required: Phillips screw driver; slotted screw driver; step-ladder; wire cutters; electrical tape.

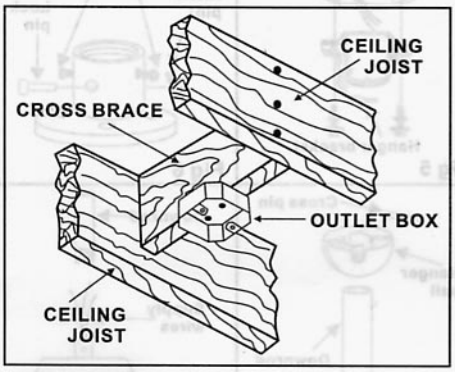

FIG. 1

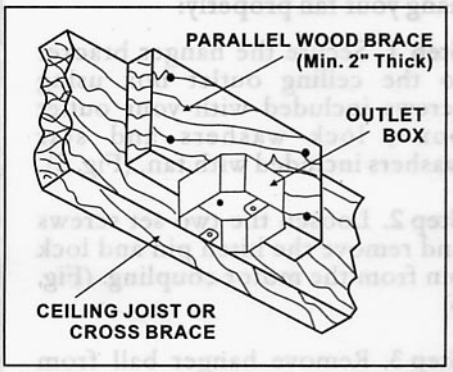

FIG. 2

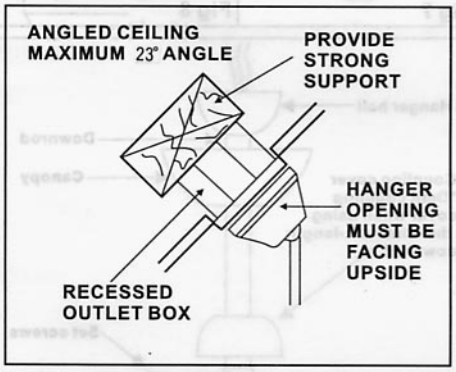

FIG. 3

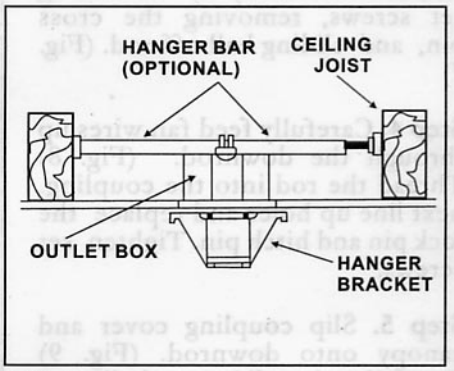

FIG. 4

Mounting Options

If there isn't an existing mounting box, then read the following instructions. **Disconnect the power by removing fuses or turning off circuit breakers.**

Secure the outlet box directly to the building structure. Use appropriate fasteners and building materials. The outlet box and its support must be able to fully support the moving weight of the fan (at least 50 lbs.). **Use a UL Listed metal outlet box. Do not use a plastic outlet box.**

Figure 1, 2 and 3 are examples of different ways to mount the outlet box.

Note: You may need a longer downrod to maintain proper blade clearance when installing on a steep, sloped ceiling. Longer downrods are available from your **Minka-Aire** dealer.

To hang your fan where there is an existing fixture but no ceiling joist, you may need to install a hanger bar as shown in Fig. 4 (available at your **Minka-Aire** dealer).

HANGING THE FAN 4.

REMEMBER to turn off the power. Follow the steps below to hang your fan properly:

Step 1. Secure the hanger bracket to the ceiling outlet box using screws included with your outlet box , lock washers and star washers included with fan. (Fig. 5)

Step 2. Loosen the two set screws and remove the hitch pin and lock pin from the motor coupling. (Fig. 6)

Step 3. Remove hanger ball from downrod assembly by loosening set screws, removing the cross pin, and sliding ball off rod. (Fig. 7)

Step 4. Carefully feed fan wires up through the downrod. (Fig. 8) Thread the rod into the coupling, next line up holes and replace the lock pin and hitch pin. Tighten set screws.

Step 5. Slip coupling cover and canopy onto downrod. (Fig. 9) Carefully reinstall hanger ball onto rod being sure that the cross-pin is in the correct position, set screws are tighten and wires are not twisted.

Step 6. Now lift the motor assembly into position and place downrod ball into hanger bracket. Rotate until the check groove has dropped into the registration slot and seats firmly. (Fig. 10) Rod should not rotate if this is done correctly.

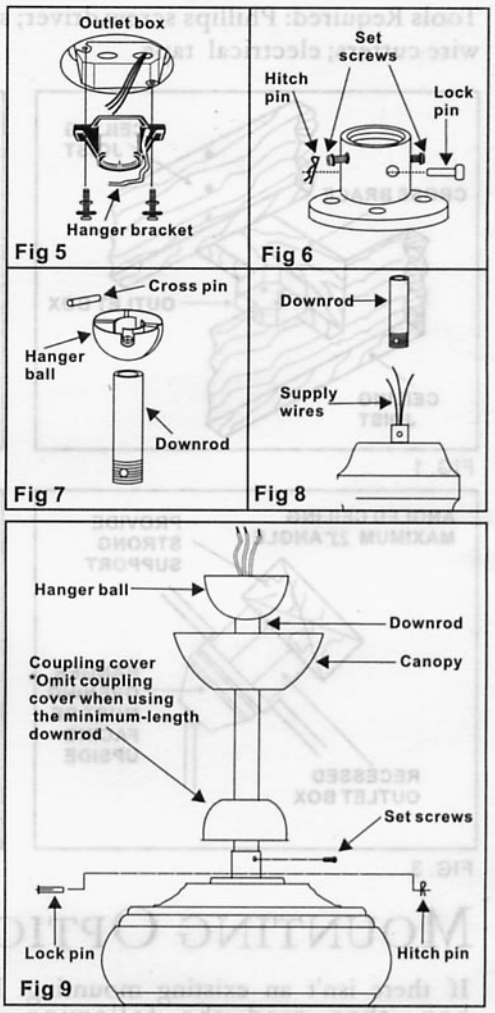

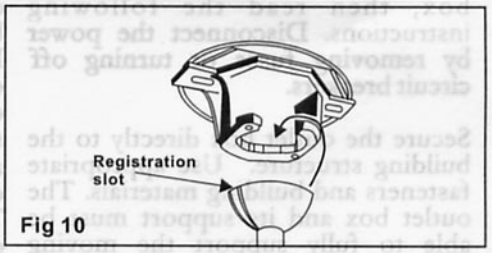

5. Installing the Receiver

WARNING: To avoid possible electrical shock, be sure electricity is turned off at the circuit breaker or main fuse box before wiring.

NOTE: (Fig. 11). This remote control unit is equipped with16 code combinations to prevent possible interference from or to other remote units. The frequency switches on your Receiver and transmitter have been preset at the factory. Please recheck to make sure the switches on transmitter and receiver are set To the same position, any combination of settings will operate the fan as long as the transmitter and receiver are set to the same position.

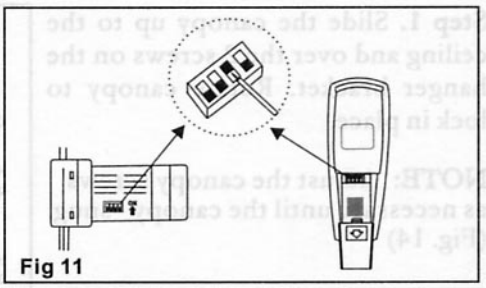

Fig 11

Step 1. (Fig. 12) Insert the receiver unit into the hanger bracket with the flat side of the receiver facing the ceiling.

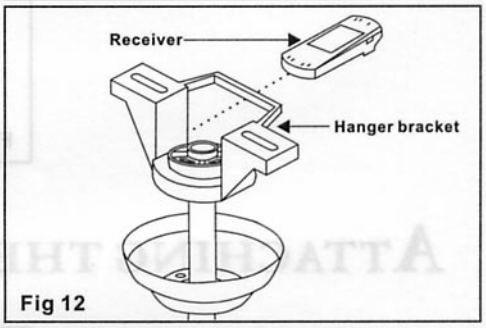

Fig 12

Step 2. (Fig. 13) Motor to receiver Electrical Connections; Connect the Black wire from the fan to the Black wire marked "To Motor L" from the receiver. Connect the White wire from the fan to the White wire marked "To Motor N" from the receiver. Connect the Blue wire from the fan to the Blue wire marked "For Light" from the receiver.

Step 3.(Fig. 13) Receiver to house supply wires Electrical Connections; Connect the Black (Hot) wire from the outlet box to the Black wire marked "AC in L" from the receiver. Connect the White (neutral) wire from the outlet box to the white wire marked "AC in N" from the receiver. Secure all wire connections with the plastic wire nuts provided.

Step 4. (Fig. 13) If your outlet box has a ground wire (green or bare copper) connect the fan ground wire from hanger ball and hanger bracket to it; otherwise connect the fan ground wire from the hanger ball and hanger bracket together.

Step 5. After the splices are made, secure connectors with electrical tape. Spread the wires apart so that the green and white wires are on one side of the outlet box and the black and blue wires are on the other. Make sure there are no loose strands or connections. Turn wire connectors upward and push the wiring into the outlet box.

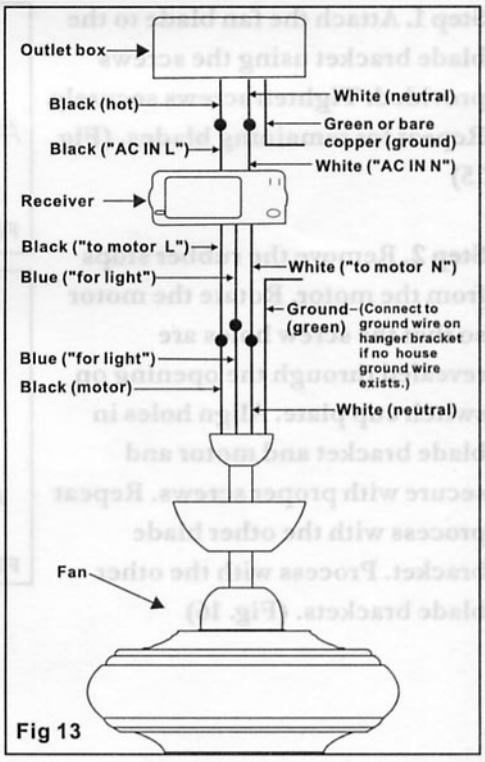

Fig 13

FINISHING THE INSTALLATION 6.

Step 1. Slide the canopy up to the ceiling and over the 2 screws on the hanger bracket. Rotate canopy to lock in place.

NOTE: Adjust the canopy screws as necessary until the canopy snug. (Fig. 14)

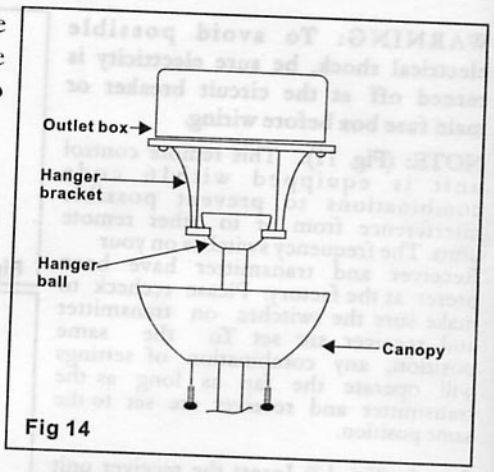

Fig 14

ATTACHING THE FAN BLADES 7.

Step 1. Attach the fan blade to the blade bracket using the screws provided. Tighten screws securely. Repeat for remaining blades. (Fig. 15)

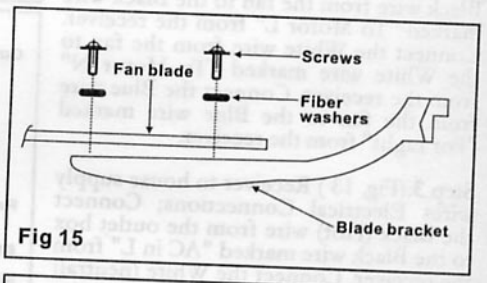

Fig 15

Step 2. Remove the rubber stops from the motor. Rotate the motor so that the screw holes are revealed through the opening on switch cup plate. Align holes in blade bracket and motor and secure with proper screws. Repeat process with the other blade bracket. Process with the other blade brackets. (Fig. 16)

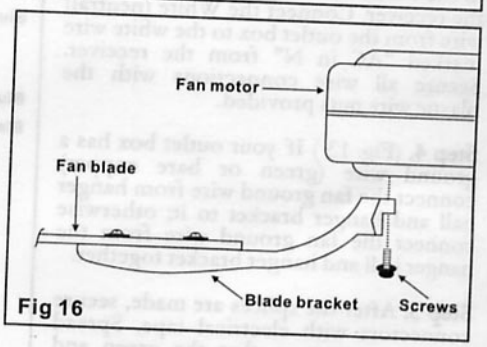

Fig 16

8. Light Kit Installation

.**Step 1.** Remove and discard the center plug from the switch cup. (Fig. 17)

Step 2. Feed the BLACK and WHITE wires from the light kit through the center hole of the switch cup. Thread the switch cup to the nipple on the light kit. (Fig. 17)

Make sure the light kit is securely attached to the switch cup to prevent it from vibrating loose during fan operation.

Step 3. Carefully move the wires in the switch cup to the side to allow the lock washer and nut to be threaded onto the nipple in light kit. Do not over tighten.

Step 4. Locate the WHITE and BLUE wires in the switch cup labeled "LIGHT", remove the wire nuts attached to these wires. (Fig. 17)

Step 5. Proceed to make the wire connections as follows; Connect the WHITE wire from the switch cup to the WHITE wire from the light kit, secure the connection with a wire nut previously removed. Follow the same procedure for the BLUE wire from switch cup and BLACK wire from light kit. You may wrap the connections with electrical tape for added safety. (Fig. 17)

Step 6. Carefully and neatly tuck the wire connections into the switch cup.

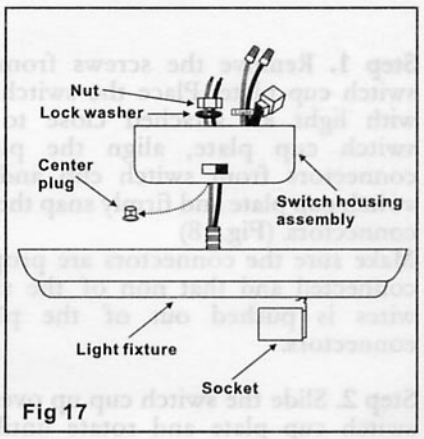

Fig 17

INSTALLING THE LIGHT BULB & GLASS SHADE 9.

Step 1. Remove the screws from the switch cup plate. Place the switch cup with light kit attached close to the switch cup plate, align the plastic connectors from switch cup and the switch cup plate and firmly snap the two connectors. (Fig. 18)
Make sure the connectors are properly connected and that non of the single wires is pushed out of the plastic connectors.

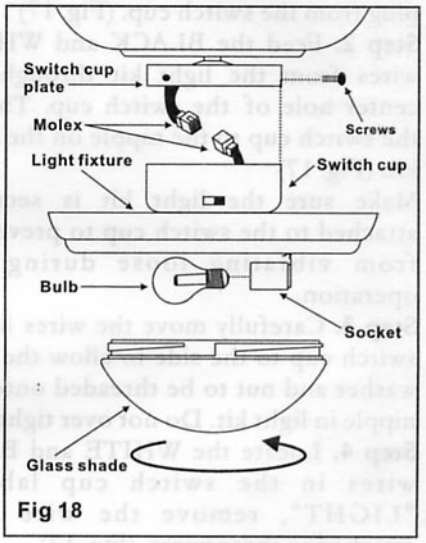

Fig 18

Step 2. Slide the switch cup up over the switch cup plate and rotate until the screw holes are aligned. Secure the switch cup with three screws previously removed. (Fig. 18)

CAUTION: Make sure that the wires are not pinched between the switch cup and the switch cup plate.

Step 3. Install the light bulbs in accordance with fixture's specifications. **DO NOT EXCEED THE MAXIMUM WATTAGE RATING.**

Step 4. Install the glass diffuser.

10. Operating Your Transmitter

Restore power to ceiling fan and test for proper operation.

A. HI, MED, and LOW buttons:
These three buttons are used to set the fan speed as follows:

HI= High speed
MED= Medium speed
LOW= Low speed

B. "FAN OFF" button:
This button turns the fan off.

C. The "Light" button turns the light ON or OFF and also controls the brightness setting. Press and release the button to turn the light On or OFF. Press and hold the light button to set the desire brightness. The light will cycle continuously between bright and dim settings as long as the button is held down. The light key has an auto-resume, it will stay at the same brightness as the last time it was turned off.

D. The Slide "OFF-ON" button turns all power off-on to fan and light.

Speed settings for warm or cold weather depend on factors such as room size, ceiling height and number of fans, etc.

The slide switch is located above the switch cup, Slide the switch to the Left for warm weather operation. Slide the switch to the right for cool weather operation.

NOTE: Wait for fan to stop before changing the setting of the SLIDE SWITCH.

Warm weather (Forward) A downward airflow creates a cooling effect as shown in Figure 19. This allows you to set your air conditioner on a warmer setting without affecting your comfort.

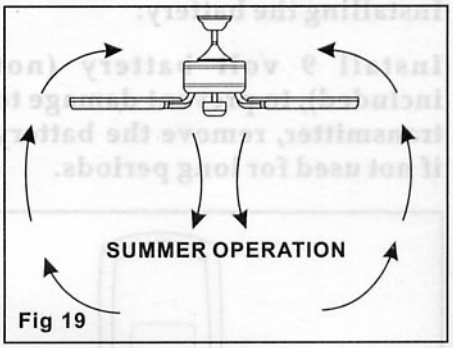

Fig 19

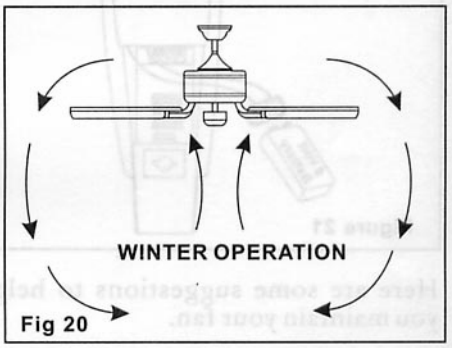

Fig 20

Cool weather (Reverse) An upward airflow moves warmer air off the ceiling area as shown in Figure 20. This allows you to set your heating unit on a cooler setting without affecting your comfort.

CARE OF YOUR FAN 11.

Installing the battery:

Install 9 volt battery (not included), to prevent damage to transmitter, remove the battery if not used for long periods.

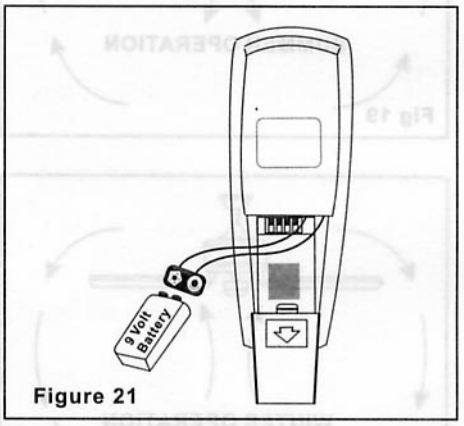

Figure 21

Here are some suggestions to help you maintain your fan.

1.Because of the fan's natural movement, some connections may become loose. Check the support connections, brackets, and blade attachments twice a year. Make sure they are secure. (**It is not necessary to remove fan from ceiling.**).

2. Clean your fan periodically to help maintain its new appearance over the years. Do not use water when cleaning. This could damage the motor, or the wood, or possibly cause an electrical shock.

3. Use only a soft brush or lint-free cloth to avoid scratching the finish. The plating is sealed with a lacquer to minimize discoloration or tarnishing.

4. You can apply a light oat of furniture polish to the wood for additional protection and enhanced beauty. Cover small scratches with a light application of shoe polish.

5. **There is no need to oil your fan.** The motor has permanently lubricated bearings.

6. All glass should be cleaned using lukewarm soapy water and a soft cloth or sponge.

DO NOT IMMERSE GLASS IN HOT WATER. DO NOT PUT GLASS INTO AN AUTOMATIC DISHWASHER

WARNING
Make sure the power is off at the electrical panel box Before you attempt any repairs. Refer to the section, "Making Electrical Connections".

12. Troubleshooting

Problem	Solution
Fan will not start	1. Check fuses or circuit breakers. 2. Check line wire connections to fan. **CAUTION:** Make sure main power is off. 3. Check to make sure the dip switches from the transmitter and receiver are set to the same frequency.
Fan sounds noisy.	1. Allow a 24-hour "break-in" period. Most noises associated with a new fan will go away during this time. 2. Make sure all motor housing screws are snug. 3. Make sure that the screws that attach the fan bade bracket to the motor hub are tight. 4. Make sure your outlet box is secured and rubber pads were used between the hanger bracket and outlet box.
Fan Wobble	1. Check that all blade and blade holder screws are secured. 2. Use the enclosed blade balancing kit if blade wobble is excessive. (See instructions included with the balancing kit.) NOTE: All blade sets are grouped by weight. Because natural wood blades vary in density, the fan may wobble even though blades are weight matched.

13. Specifications

Fan Size	Speed	Volts	Amps	Watts	RPM	CFM	N.W.	G.W.	C.F.
52"	Low	120	0.30	9	47	2300	11.3kgs	12.3kgs	2.24'
	Medium	120	0.49	33	106	3100			
	High	120	0.66	79	172	6000			

These are typical readings. Your actual fan may vary. They do not include Amps and Wattage used by the light kit.

For any additional information about your **Minka-Aire**™ Ceiling fan, please write to:

minkaAire™ 1151 W. Bradford Court
Corona, CA 92882

For customer assistance call: 1-800-307-3267