INSTALLATION INSTRUCTIONS

Item#N7813-726 (New. 2022/05/11)

READ AND SAVE THESE INSTRUCTIONS

WARNING! SHUT POWER OFF AT FUSE OR CIRCUIT BREAKER.

AVERTISSEMENT! COUPER LE COURANT AU NIVEAU DES FUSIBLES OU DU DISJONCTEUR.

PREPARATION (Fig. 1)

1. Shut off power at the fuse box or circuit breaker box and remove the old fixture including the mounting hardware.
2. Carefully unpack your new fixture and lay out all the parts in a clean area. Take care not to misplace any small parts necessary for installation.

ASSEMBLING THE FIXTURE (Fig. 1)

3. Place metal tube (Z) over fixture body (K) and secure with screws (Y). Place metal frame (H) over metal tube (Z) and secure with screws (X).
4. Secure rod (J) onto all thread (T) on fixture body (K) and place metal ring (Q) over rod (J).
5. Secure rod (V) onto rod (J).
6. Determine the desired hanging height and thread rods (F1, F2 and F3) to rod (V). Carefully pass wires through each rod during assembly.
7. Align canopy (E) and metal plate (P) followed by lock washer (O) and metal washer (N) onto all thread of rod (F1) and secure with hex nuts (M) via Wrench (U) (not included).
8. Position mounting plate (B) one ceiling and mark location of the three mounting holes. Drill holes on ceiling and insert plastic anchors (A).
9. Attach mounting plate (B) to junction box (Not included) with mounting screws (C) (Size: #8-32N*L0.5") and wood screws (D) into drywall anchors (A). The side of mounting plate marked "GND" must face out.
10. The support cable is provided to support weight of fixture while wiring. Align fixture to mounting plate (B) and attach hook (R) on end of support cable (S) into a slot located on mounting plate (B). Carefully allow support cable (S) to support the weight of fixture while wiring.

CONNECTING THE WIRES (Fig. 2)

11. Connect the electrical wires as shown in Fig. 2, making sure that all wire connectors are secured. If your junction box has a ground wire (green or bare copper), connect fixture's ground wire to it. Otherwise, connect the fixture's ground wire directly to the mounting plate (B) using green screw provided.
    Tuck wire connectors neatly inside the junction box.

COMPLETING THE INSTALLATION (Fig. 1)

12. Align canopy (E) onto mounting plate (B) and secure with screws (L).
13. Place glass panel (G) into metal frame (H) and secure with tabs provided.
14. Install (4) four medium base bulbs (I) up to 60 watts each or CFL or LED equivalent (not included) in accordance with the fixture specification—**DO NOT EXCEED THE MAXIMUM WATTAGE RATING! (NE PAS DEPASSER LA PUISSANCE NOMINALE MAXIMALE!).**

Your installation is now complete. Return power to the junction box and test fixture.

Note: Illustration (Fig.1) on this manual is for installation purposes only. It may or may not be identical to the fixture purchased.

Fig. 1

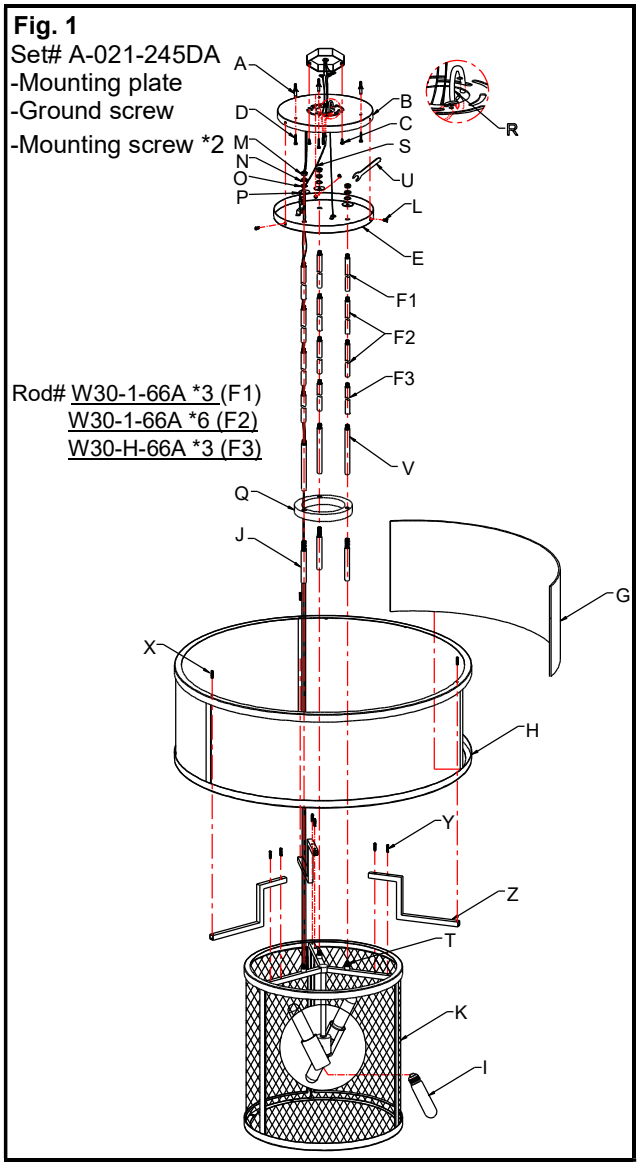

Fig. 2

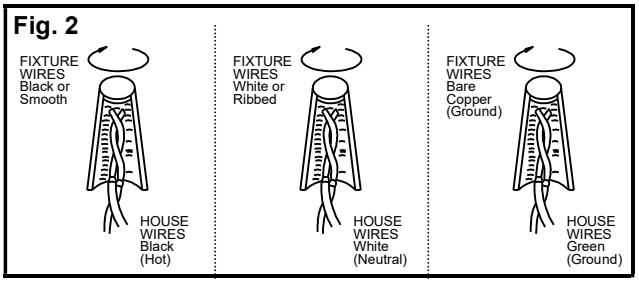

LA-3543E