INSTALLATION INSTRUCTIONS

For P5411-077-L / P5412-077-L / P5413-077-L / P5414-077-L

WARNING! SHUT POWER OFF AT FUSE OR CIRCUIT BREAKER.

AVERTISSEMENT! COUPER LE COURANT AU NIVEAU DES FUSIBLES OU DU DISJONCTEUR.

PREPARATION

1. Shut off power at the fuse box or circuit breaker box and remove the old fixture including the mounting hardware.
2. Carefully unpack your new fixture and lay out all the parts on a clear area. Take care not to misplace any small parts necessary for installation.

MOUNTING THE FIXTURE (Fig. 1)

3. Secure mounting plate (B) to junction box (not included) using mounting screws (A) (Size: #8-32*1/2"L). The side of the mounting plate marked "GND" must face out.

CONNECTION THE WIRES (Fig. 2)

4. Connect the electrical wires as shown in Fig. 2, making sure that all wire connectors are secured. If your junction box has a ground wire (green or bare copper), connect the fixture's ground wire to it. Otherwise, connect the fixture's ground wire directly to the mounting plate (B) using the green screw provided.
5. Tuck wire connections neatly inside the junction box.

FINISHING THE INSTALLATION (Fig. 1)

6. Place fixture body (F) over mounting plate (B) and secure with screws (E).

Screw glass shade (G & G1) into fixture body (F).

Your installation is now complete. Return power to the junction box and test the fixture.

CAUTION / ATTENTION: When handling the fixture, do not apply pressure to the LEDs. Hold the fixture by the base or fixture body only.

IMPORTANT: Fixture should be installed by a qualified electrician to ensure proper wiring and installation.

Dimmable with ELV and/or LED compatible wall dimmer switch.

MIN 90°C SUPPLY CONDUCTORS
LES FILS D'ALIMENTATION 90°C **MIN**

Fig. 1
Mounting Plate Set #:
A-021-120110 for P5411-077-L
A-021-140110 for P5412-077-L
A-021-140110 for P5413-077-L
A-021-140110 for P5414-077-L
-Mounting plate (B)
-Ground screw (C)
-Mounting screw (A)

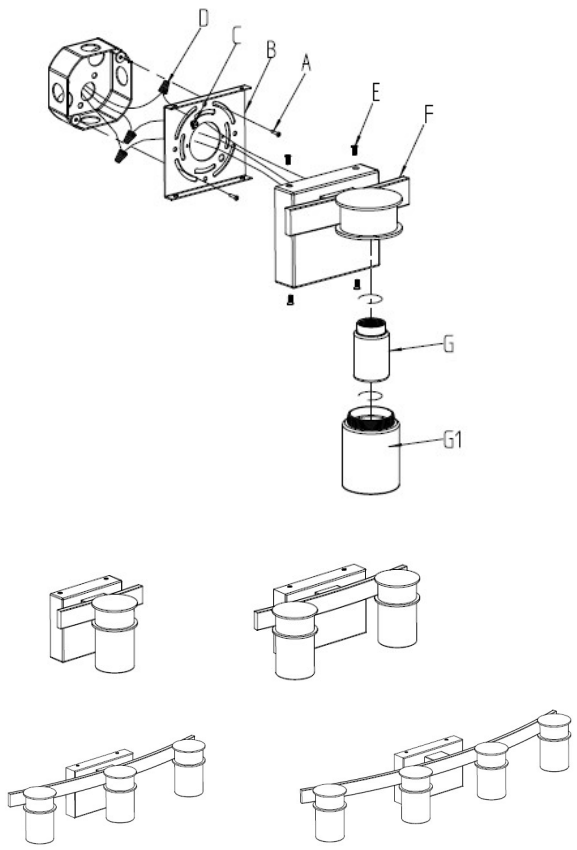

Fig. 2

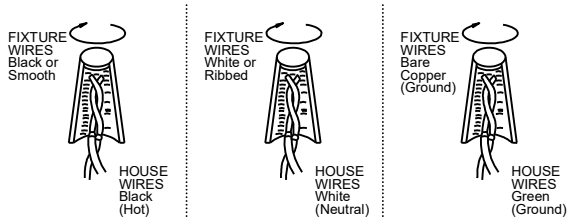

C ETL LISTED US Intertek

american lighting associatio