INSTALLATION INSTRUCTIONS

For Models # P806-077 (Revised Date: March 28,2011)

WARNING! SHUT POWER OFF AT FUSE OR CIRCUIT BREAKER.

AVERTISSEMENT! COUPER LE COURANT AU NIVEAU DES FUSIBLES OU DU DISJONCTEUR.

WARNING

- Risk of shock, do not plug in the unit before assembly.

MOUNTING THE FIXTURE (Fig. 1)

1. Shut off power at the circuit breaker and remove the old fixture including the mounting hardware.
2. Carefully remove the fixture from the carton and check that all parts are included as shown in (Fig 1).
3. Remove mounting screws (E) from canopy (D). Secure crossbar (A) using mounting screws (B) to the outlet box. The side of the crossbar labeled “GND” must face out.

ADJUST LENGTH OF ELECTRIC CABLE (Fig. 3)

4. **Please refer to Fig. 3 if the hanging height needs to be adjusted. The support cables do not need to be cut. Pull the excess cable into the canopy until the desired hanging height is reached. Secure the support cable with the strain relief provided. Next, pull the excess electrical cable into canopy. Knot the electrical cable in the canopy so it does not pull out. Carefully cut and remove approximately 4” of the outer sheathing from the cord end and strip 1/2” of the wire ends bare to expose the copper strands.**
5. **For minor adjustments after installation is complete, depress the button at the canopy and allow the desired length of support cable to slowly pull from the canopy. Once the desired hanging height is reached, release the button to secure the support cable in place. Should you need to slightly shorten the hanging height, simply push the support cable through the relief button until the desired height is reached. The button does not need to be depressed to shorten the hanging height.**

CONNECTING THE WIRES (Fig. 2)

6. Connect the electrical wires as shown in Fig. 2, making sure that all wire connectors (C) are secured. If your outlet has a ground wire (green or bare copper), connect the fixture’s ground wire to it. Otherwise, connect the fixture’s ground wire directly to the crossbar using the green screw provided.

FINISHING THE INSTALLATION (Fig. 1)

7. Raise canopy (D) to crossbar (A) and secure tightly with screws (E).
8. Install the 6-40W Xenon Bulbs (G) in accordance with the fixture’s specifications. **(DO NOT EXCEED THE MAXIMUM WATTAGE RATING). (NE PAS DEPASSER LA PUISSANCE NOMINALE MAXIMALE!)**
9. Place the glass shade (H) on the lamp holder (F). Place the silicone ring (I) between the lamp holder (F) and glass shade (H). Use the aluminum cube (J) to fix the glass shade to the lamp body by turning clockwise. Repeat step 8 for each glass shade.

Your installation is now complete. Return power to the junction box and test the fixture.

IMPORTANT: FIXTURE SHOULD BE INSTALLED BY A QUALIFIED ELECTRICIAN TO ENSURE PROPER WIRING AND INSTALLATION.

Fig. 1

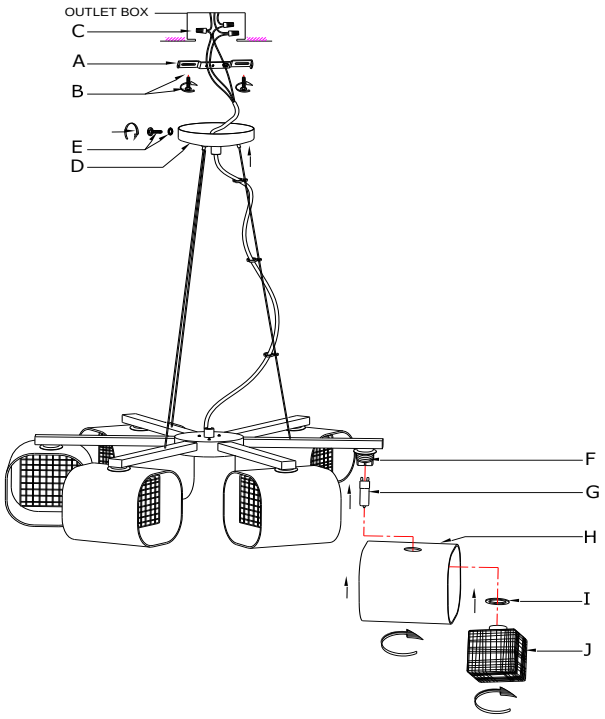

Fig. 2

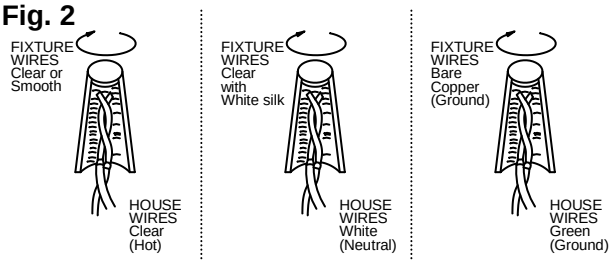
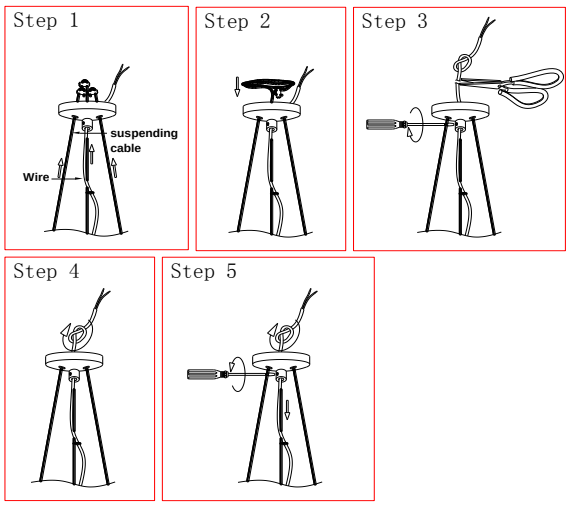
Fig. 3